RB3500

Incremental encoder with solid shaft

INCREMENTAL ENCODER BASIC LINE

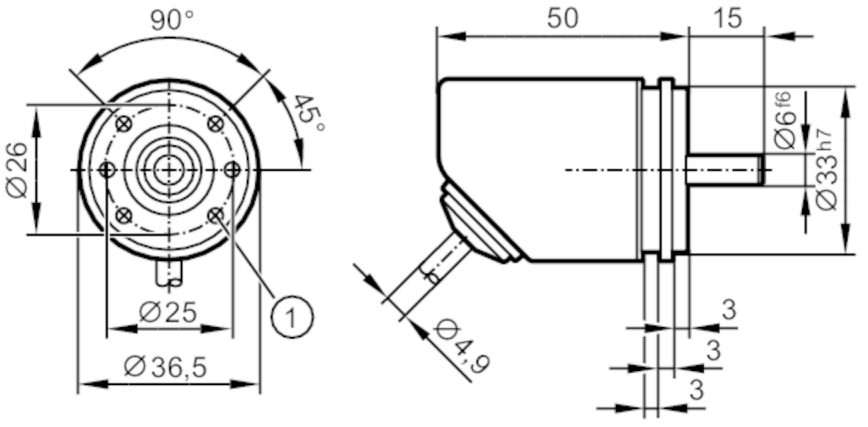

1 M3 x 0.5 Depth 6 mm

Application		
Function principle		incremental
Detection system		magnetic
Electrical data		
Operating voltage	[V]	4.75...30 DC
Current consumption	[mA]	< 150
Protection class		III
Reverse polarity protection		yes
Power-on delay time	[s]	0.5
Max. revolution electrical	[U/min]	12000
Outputs		
Electrical design		HTL/TTL
Switching frequency	[kHz]	1000
Factory setting		Output function: HTL (50 mA)
Short-circuit protection		yes
Phase difference A und B	[°]	90
Measuring/setting range		
Resolution		1...10000; (configurable; Factory setting: 1024) resolution
Accuracy / deviations		
Accuracy	[°]	0.1
Software / programming		
Parameter setting options		Resolution; Direction of rotation; HTL; TTL
Interfaces		
Communication interface		IO-Link
Transmission type		COM 2
IO-Link revision		1.1
SIO mode		yes
Min. process cycle time	[ms]	2.3

RB3500

Incremental encoder with solid shaft

INCREMENTAL ENCODER BASIC LINE

Operating conditions		
Ambient temperature	[°C]	-40...80
Note on ambient temperature		for flexibly laid cable: -25 °C
Storage temperature	[°C]	-40...80
Max. relative air humidity	[%]	95; (Condensation not permissible)
Protection		IP 65; IP 66; (on the housing: IP 67; on the shaft: IP 64)

Tests / approvals			
Shock resistance			200 g
Vibration resistance			30 g
MTTF	[years]	292	

Mechanical data		
Weight	[g]	284.2
Dimensions	[mm]	Ø 36.5 / L = 65
Material		flange: aluminum; housing: stainless steel (1.4521 / 444); cable plug: PA
Max. revolution, mechanical	[U/min]	12000
Max. starting torque	[Nm]	1
Reference temperature torque	[°C]	20
Shaft design		solid shaft
Shaft diameter	[mm]	6
Shaft material		stainless steel
Max. shaft load axial (at the shaft end)	[N]	40
Max. shaft load radial (at the shaft end)	[N]	60

Electrical connection

Cable: 2 m, Ø 4.9 mm; Maximum cable length: 100 m; radial, can also be used axially; 5 x 0.14 mm²

IO-Link

brown	L+
white	not to be used
blue	L-
grey	not to be used
black	IO-Link
screen	housing

encoder

brown	UB
white	A
blue	GND
grey	B
black	Z/0-Pulse (90 deg)
screen	housing

RB3500

Incremental encoder with solid shaft

INCREMENTAL ENCODER BASIC LINE

Diagrams and graphs

Pulse diagram	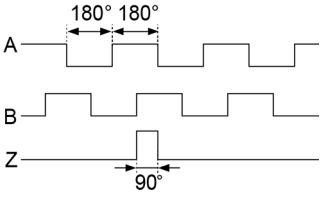 Direction of rotation clockwise (looking at the shaft)