PSR-SCP- 24DC/ESP4/2X1/1X2 - Safety relays

2981020

https://www.phoenixcontact.com/us/products/2981020

Please be informed that the data shown in this PDF document is generated from our online catalog. Please find the complete data in the user documentation. Our general terms of use for downloads are valid.

Safety relay for SIL 3 high-demand and low-demand applications, also approved in accordance with EN 50156, DNV, and EN ISO 13849, emergency stop and safety door monitoring, 1-channel, 2 enabling current paths, 1 signal contact, plug-in screw terminal blocks, width: 22.5 mm

Your advantages

- Up to Cat. 4/PL e in accordance with ISO 13849-1, SIL 3 in accordance with EN IEC 62061, SIL 3 in accordance with IEC 61508
- 1-channel control
- Safe isolation
- With inrush current reduction, therefore suitable for coupling to failsafe controllers (PSR-ESP4)

Commercial data

Item number	2981020
Packing unit	1 pc
Minimum order quantity	1 pc
Sales key	DN01
Product key	DNA161
Catalog page	Page 256 (C-6-2019)
GTIN	4017918911065
Weight per piece (including packing)	183.05 g
Weight per piece (excluding packing)	152.86 g
Customs tariff number	85371098
Country of origin	DE

Technical data

Notes

Note on application

Note on application	Only for industrial use

Product properties

Product type	Safety relays
Product family	PSRclassic
Application	Emergency stop
	Process technology
	Safety door
Mechanical service life	approx. 10^7 cycles
Relay type	Electromechanical relay with force-guided contacts in accordance with IEC/EN 61810-3

Data management status

Article revision	12

Times

Typical response time	typ. 60 ms (For U_s manual, monitored start)
	60 ms (For U_s autostart)
Typ. starting time with U_s	60 ms (At Us/on demand via A1)
Typical release time	typ. 20 ms (At Us/on demand via A1)
Restart time	< 1 s (Boot time)
Recovery time	≥ 1 s (following demand of the safety function)

Electrical properties

Maximum power dissipation for nominal condition	16.12 W (At U_S = 26.4 V, $I_L{}^2$ = 72 A², $P_{Total\ max}$= 1.72 W + 14.4 W)
Nominal operating mode	100% operating factor

Air clearances and creepage distances between the power circuits

Rated insulation voltage	250 V
	250 V
Rated surge voltage/insulation	See section “Insulation coordination”

Input data

Digital: Logic (A1)

Description of the input	safety-related
Number of inputs	1
Input voltage range "1" signal	20.4 V ... 26.4 V
Inrush current	max. 1 A (typ. with U_S, Δt = < 10 ms)
	max. 3 ms (Test pulse width of low test pulses)

Filter time	min. 200 ms (Test pulse rate for low test pulse)
	No brightness test pulses / high test pulses permitted.
Max. permissible overall conductor resistance	50 Ω
Protective circuit	Suppressor diode
Current consumption	65 mA (typ. with U_S)

Digital: Start circuit (Y2)

Description of the input	non-safety-related
Number of inputs	1
Input voltage range "1" signal	20.4 V ... 26.4 V
Inrush current	< 14 mA (typically with U_S at Y2, Δt - 10 ms)
Filter time	No test pulses permitted
Max. permissible overall conductor resistance	50 Ω
Protective circuit	Suppressor diode
Current consumption	0 mA (typically with U_S at Y2)

Output data

Relay: Enabling current paths (13/14, 23/24)

Output description	2 N/O contacts each in series, safety-related, floating
Number of outputs	2
Contact switching type	2 enabling current paths
Contact material	$AgSnO_2$
Switching voltage	min. 10 V
	max. 250 V AC/DC
Switching capacity	min. 100 mW
Inrush current	min. 10 mA
	max. 6 A
Switching capacity in accordance with IEC 60947-5-1	5 A (AC15)
	5 A (DC13)
Limiting continuous current	6 A (Observe derating and load limit curve)
Sq. Total current	72 A^2 (observe derating)
Switching frequency	max. 0.5 Hz
Mechanical service life	10^7 cycles
Interrupting rating (ohmic load) max.	Observe derating and load limit curve
Maximum interrupting rating (inductive load)	Observe derating and load limit curve
Output fuse	10 A gL/gG
	4 A gL/gG (for low-demand applications)

Relay: Signaling current path (31/32)

Output description	2 N/C contacts parallel, non-safety-related, floating
Number of outputs	1
Contact switching type	1 signaling current path
Contact material	$AgSnO_2$
Switching voltage	min. 10 V AC/DC

	max. 250 V AC
Switching capacity	min. 100 mW
Inrush current	min. 10 mA
	max. 6 A
Switching capacity in accordance with IEC 60947-5-1	1.5 A (AC15)
	2 A (DC13)
Limiting continuous current	6 A
Sq. Total current	36 A^2 (observe derating)
Switching frequency	max. 0.5 Hz
Mechanical service life	10^7 cycles
Interrupting rating (ohmic load) max.	Observe derating and load limit curve
Maximum interrupting rating (inductive load)	Observe derating and load limit curve
Output fuse	6 A gL/gG

Connection data

Connection technology

pluggable	yes

Conductor connection

Connection method	Screw connection
Conductor cross section rigid	0.2 mm² ... 2.5 mm²
Conductor cross section flexible	0.2 mm² ... 2.5 mm²
Conductor cross-section AWG	24 ... 12
Stripping length	7 mm
Screw thread	M3

Signaling

Status display	LED (green)
Operating voltage display	Green LED

Dimensions

Width	22.5 mm
Height	99 mm
Depth	114.5 mm

Material specifications

Color (Housing)	yellow (RAL 1018)
Housing material	Polyamide

Characteristics

Safety data

Stop category	0

Safety data: EN ISO 13849

Category	4

Performance level (PL)	e

Safety data: IEC 61508 - High demand

Safety Integrity Level (SIL)	3

Safety data: IEC 61508 - Low demand

Safety Integrity Level (SIL)	3

Safety data: EN IEC 62061

Safety Integrity Level (SIL)	3

Environmental and real-life conditions

Ambient conditions

Degree of protection	IP20
Min. degree of protection of inst. location	IP54
Ambient temperature (operation)	-20 °C ... 55 °C (observe derating)
Ambient temperature (storage/transport)	-40 °C ... 70 °C
Maximum altitude	≤ 2000 m (Above sea level)
Max. permissible humidity (storage/transport)	75 % (on average, 85% infrequently, non-condensing)
Max. permissible relative humidity (operation)	75 % (on average, 85% infrequently, non-condensing)
Shock	15g
Vibration (operation)	10 Hz ... 150 Hz, 2g

Approvals

CE

Identification	CE-compliant

Standards and regulations

Air clearances and creepage distances between the power circuits

Standards/regulations	DIN EN 60947-1

Mounting

Mounting type	DIN rail mounting
Mounting position	On horizontal and vertical DIN rail

Drawings

Circuit diagram

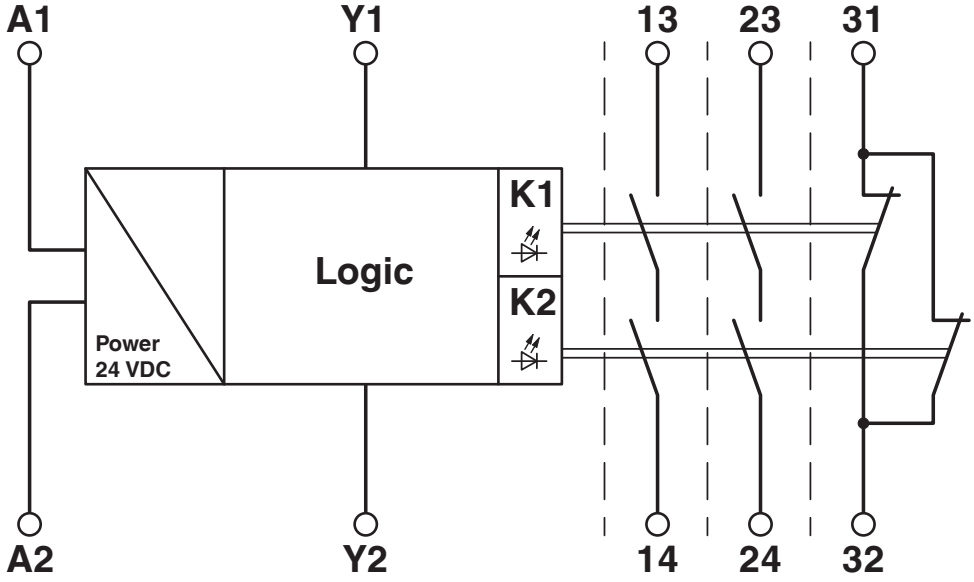

Approvals

To download certificates, visit the product detail page: https://www.phoenixcontact.com/us/products/2981020

EAC
Approval ID: TR_TS_D_00573_c

Functional Safety
Approval ID: 968/EZ 406.06/23

Functional Safety
Approval ID: 01/205/0763.04/23

DNV
Approval ID: TAA00000K4

cULus Listed
Approval ID: E140324

Classifications

ECLASS

ECLASS-11.0	27371819
ECLASS-13.0	27371819
ECLASS-12.0	27371819

ETIM

ETIM 9.0	EC001449

UNSPSC

UNSPSC 21.0	39122200

Environmental product compliance

EU RoHS

Fulfills EU RoHS substance requirements	Yes
Exemption	7(a), 7(c)-I

China RoHS

Environment friendly use period (EFUP)	EFUP-50
	An article-related China RoHS declaration table can be found in the download area for the respective article under "Manufacturer declaration". For all articles with EFUP-E, no China RoHS declaration table issued and required.

EU REACH SVHC

REACH candidate substance (CAS No.)	Lead(CAS: 7439-92-1)
SCIP	dd23503e-e0e0-475d-ae14-eaa0f4b647df

EF3.0 Climate Change

CO2e kg	9.711 kg CO2e

Phoenix Contact 2024 © - all rights reserved
https://www.phoenixcontact.com

Phoenix Contact USA
586 Fulling Mill Road
Middletown, PA 17057, United States
(+717) 944-1300
info@phoenixcon.com