# ProSense® EPS Series (-1001) Digital Pressure Sensors

## Features

- Ideal for industrial pressure measurement and indication in both gas and liquid applications
- Measuring ranges from vacuum up to 5800 psig
- Selectable engineering units include psig, bar, mbar, kPa, MPa, in$H_2O$, and inHg
- 1/4" NPT male process connection allows for direct installation without requiring extra fittings
- 2 solid state switch outputs provide a reliable alternative to mechanical pressure switches
- Output 2 can be configured as a scalable analog signal turning the unit into a combination pressure switch and transmitter
- Built-in two-color 4-digit display is easy to read from a distance and provides indication of measured pressure and switch setpoints
- Display can be set to change color between red and green based on measured value or output status and rotated 180° for installation flexibility
- 2 large bright LEDs indicate output status
- Sensor housing can be rotated 345° for optimum visibility after installation
- Simple pushbutton setup for easy and quick configuration prior to installation without the need for a separate pressure reference gauge
- Stainless steel housing allows for a high IP67 ingress protection rating
- 4-pin M12 electrical connection
- Protective cover and mounting bracket are available accessories
- Compact and robust design and construction withstands extreme shock and vibration, provides high accuracy and reliability, and incorporates the best combination of over pressure, burst pressure and long term stability for each measuring range
- 3-year warranty

## EPS Series (-1001) Digital Pressure Sensors

| Part Number | Description | Pcs/Pkg | Wt (lb) | Price |
|---|---|---|---|---|
| EPS25-V14-1001 | ProSense digital pressure sensor, -14.5 to 14.5 psig range, output 1: switch (N.O./N.C.), PNP/NPN selectable, output 2: switch (N.O./N.C.), PNP/NPN selectable or 4-20 mA/0-10 VDC, 1/4in male NPT process connection, 4-pin M12 quick-disconnect, 18-30 VDC operating voltage, 4-digit, two-color LED display, for use with compatible liquids or gases. Purchase cable separately. | 1 | 0.5 | $322.00 |
| EPS25-100WC-1001 | ProSense digital pressure sensor, -5 to 100.4 inches of water column range, output 1: switch (N.O./N.C.), PNP/NPN selectable, output 2: switch (N.O./N.C.), PNP/NPN selectable or 4-20 mA/0-10 VDC, 1/4in male NPT process connection, 4-pin M12 quick-disconnect, 18-30 VDC operating voltage, 4-digit, two-color LED display, for use with compatible liquids or gases. Purchase cable separately. | 1 | 0.5 | $322.00 |
| EPS25-14-1001 | ProSense digital pressure sensor, -0.72 to 14.5 psig range, output 1: switch (N.O./N.C.), PNP/NPN selectable, output 2: switch (N.O./N.C.), PNP/NPN selectable or 4-20 mA/0-10 VDC, 1/4in male NPT process connection, 4-pin M12 quick-disconnect, 18-30 VDC operating voltage, 4-digit, two-color LED display, for use with compatible liquids or gases. Purchase cable separately. | 1 | 0.5 | $322.00 |
| EPS25-36-1001 | ProSense digital pressure sensor, -1.8 to 36.25 psig range, output 1: switch (N.O./N.C.), PNP/NPN selectable, output 2: switch (N.O./N.C.), PNP/NPN selectable or 4-20 mA/0-10 VDC, 1/4in male NPT process connection, 4-pin M12 quick-disconnect, 18-30 VDC operating voltage, 4-digit, two-color LED display, for use with compatible liquids or gases. Purchase cable separately. | 1 | 0.5 | $322.00 |
| EPS25-V145-1001* | ProSense digital pressure sensor, -14.6 to 145 psig range, output 1: switch (N.O./N.C.), PNP/NPN selectable, output 2: switch (N.O./N.C.), PNP/NPN selectable or 4-20 mA/0-10 VDC, 1/4in male NPT process connection, 4-pin M12 quick-disconnect, 18-30 VDC operating voltage, 4-digit, two-color LED display, for use with compatible liquids or gases. Purchase cable separately. | 1 | 0.5 | $322.00 |
| EPS25-360-1001* | ProSense digital pressure sensor, -14.5 to 362.5 psig range, output 1: switch (N.O./N.C.), PNP/NPN selectable, output 2: switch (N.O./N.C.), PNP/NPN selectable or 4-20 mA/0-10 VDC, 1/4in male NPT process connection, 4-pin M12 quick-disconnect, 18-30 VDC operating voltage, 4-digit, two-color LED display, for use with compatible liquids or gases. Purchase cable separately. | 1 | 0.5 | $322.00 |
| EPS25-1450-1001* | ProSense digital pressure sensor, 0 to 1450 psig range, output 1: switch (N.O./N.C.), PNP/NPN selectable, output 2: switch (N.O./N.C.), PNP/NPN selectable or 4-20 mA/0-10 VDC, 1/4in male NPT process connection, 4-pin M12 quick-disconnect, 18-30 VDC operating voltage, 4-digit, two-color LED display, for use with compatible liquids or gases. Purchase cable separately. | 1 | 0.5 | $322.00 |
| EPS25-3620-1001 | ProSense digital pressure sensor, 0 to 3625 psig range, output 1: switch (N.O./N.C.), PNP/NPN selectable, output 2: switch (N.O./N.C.), PNP/NPN selectable or 4-20 mA/0-10 VDC, 1/4in male NPT process connection, 4-pin M12 quick-disconnect, 18-30 VDC operating voltage, 4-digit, two-color LED display, for use with compatible liquids or gases. Purchase cable separately. | 1 | 0.5 | $322.00 |
| EPS25-5800-1001 | ProSense digital pressure sensor, 0 to 5800 psig range, output 1: switch (N.O./N.C.), PNP/NPN selectable, output 2: switch (N.O./N.C.), PNP/NPN selectable or 4-20 mA/0-10 VDC, 1/4in male NPT process connection, 4-pin M12 quick-disconnect, 18-30 VDC operating voltage, 4-digit, two-color LED display, for use with compatible liquids or gases. Purchase cable separately. | 1 | 0.5 | $322.00 |

** For gas applications 362 psig (25bar) maximum pressure!*

Note: Check the chemical compatibility of the sensor's wetted parts with the medium to be measured.

# ProSense® EPS Series (-1001) Digital Pressure Sensors

| EPS Series (-1001) Digital Pressure Sensors | | | | | | | | | |
|---|---|---|---|---|---|---|---|---|---|
| ***Part Number*** | ***Measuring Range*** | ***Setting Range Set Point, SP*** | ***Reset Point, rP*** | ***Analog Start Point, ASP*** | ***Analog End Point, AEP*** | ***Steps*** | ***Proof Pressure*** | ***Bursting Pressure*** | ***Vacuum Resistance*** |
| ***EPS25-V14-1001*** | -14.5 to 14.5 psig<br>-1000 to 1000 mbar<br>-100 to 100 kPa<br>-402 to 402 inH20<br>-29.5 to 29.5 inHg | -14.3 to 14.5 psig<br>-985 to 1000 mbar<br>-98.5 to 100 kPa<br>-396 to 402 inH20<br>-29.2 to 29.5 inHg | -14.45 to 14.4 psig<br>-995 to 990 mbar<br>-99.5 to 99 kPa<br>-400 to 398 inH20<br>-29.4 to 29.3 inHg | -14.5 to 8.7 psig<br>-1000 to 600 mbar<br>-100 to 60 kPa<br>-402 to 240 inH20<br>-29.5 to 17.7 inHg | -8.7 to 14.5 psig<br>-600 to 1000 mbar<br>-60 to 100 kPa<br>-240 to 402 inH20<br>-17.7 to 29.5 inHg | 0.05 psig<br>5 mbar<br>0.5 kPa<br>2 inH20<br>0.1 inHg | 290 psig<br>20000 mbar<br>2000 kPa<br>8030 inH20<br>590 inHg | 725 psig<br>50000 mbar<br>5000 kPa<br>20068 inH20<br>1476 inHg | -14.5 psig<br>-1000 mbar |
| ***EPS25-100WC-1001*** | -5 to 100.4 inH20<br>-12.5 to 250 mbar<br>-1.25 to 25 kPa<br>-125 to 2550 mmWS | -4.4 to 100.4 inH20<br>-11 to 250 mbar<br>-1.1 to 25 kPa<br>-110 to 2550 mmWS | -4.8 to 100 inH20<br>-12 to 249 mbar<br>-1.2 to 24.9 kPa<br>-120 to 2540 mmWS | -5 to 80.2 inH20<br>-12.5 to 200 mbar<br>-1.25 to 20 kPa<br>-125 to 2040 mmWS | 15 to 100.4 inH20<br>37.5 to 250 mbar<br>3.75 to 25 kPa<br>385 to 2550 mmWS | 0.2 inH20<br>0.5 mbar<br>0.05 kPa<br>5mmWS | 2400 inH20<br>6000 mbar<br>600 kPa<br>61000 mmWS | 12000 inH20<br>30000 mbar<br>3000 kPa<br>306000 mmWS | -120 inH2O<br>-300 mbar |
| ***EPS25-14-1001*** | -0.72 to 14.50 psig<br>-50 to 1000 mbar<br>-5 to 100 kPa<br>-20 to 401.5 inH20 | -0.64 to 14.5 psig<br>-44 to 1000 mbar<br>-4.4 to 100 kPa<br>-17.5 to 401.5 inH20 | -0.7 to 14.44 psig<br>-48 to 996 mbar<br>-4.8 to 99.6 kPa<br>-19 to 400 inH20 | -0.72 to 11.6 psig<br>-50 to 800 mbar<br>-5 to 80 kPa<br>-20 to 321 inH20 | 2.18 to 14.5 psig<br>150 to 1000 mbar<br>15 to 100 kPa<br>60.5 to 401.5 inH20 | 0.02 psig<br>2 mbar<br>0.2 kPa<br>0.5 inH20 | 145 psig<br>10000 mbar<br>1000 kPa<br>4000 inH20 | 450 psig<br>30000 mbar<br>3000 kPa<br>12040 inH20 | -14.5 psig<br>-1000 mbar |
| ***EPS25-36-1001*** | -1.8 to 36.25 psig<br>-0.125 to 2.5 bar<br>-12.5 to 250 kPa | -1.6 to 36.25 psig<br>-0.11 to 2.5 bar<br>-11 to 250 kPa | -1.75 to 36.1 psig<br>-0.12 to 2.49 bar<br>-12 to 249 kPa | -1.8 to 29.0 psig<br>-0.125 to 2.0 bar<br>-12.5 to 200 kPa | 5.45 to 36.25 psig<br>0.375 to 2.5 bar<br>37.5 to 250 kPa | 0.05 psig<br>0.005 bar<br>0.5 kPa | 290 psig<br>20 bar<br>2000 kPa | 725 psig<br>50 bar<br>5000 kPa | |
| ***EPS25-V145-1001**** | -14.6 to 145 psig<br>-1 to 10 bar<br>-0.1 to 1 MPa | -13.6 to 145 psig<br>-0.94 to 10 bar<br>-0.094 to 1 MPa | -14.2 to 144.4 psig<br>-0.98 to 9.96 bar<br>-0.098 to 0.996 MPa | -14.6 to 116 psig<br>-1 to 8 bar<br>-0.1 to 0.8 MPa | 14.6 to 145 psig<br>1 to 10 bar<br>0.1 to 1 MPa | 0.2 psig<br>0.02 bar<br>0.002 MPa | 1087 psig<br>75 bar<br>7.5 MPa | 2715 psig<br>150 bar<br>15 MPa | |
| ***EPS25-360-1001**** | -14.5 to 362.5 psig<br>-1 to 25 bar<br>-0.1 to 2.5 MPa | -12 to 362.5 psig<br>-0.85 to 25 bar<br>-0.085 to 2.5 MPa | -13.5 to 361 psig<br>-0.95 to 24.9 bar<br>-0.095 to 2.49 MPa | -14.5 to 290 psig<br>-1 to 20 bar<br>-0.1 to 2 MPa | 58 to 362.5 psig<br>4 to 25 bar<br>0.4 to 2.5 MPa | 0.5 psig<br>0.05 bar<br>0.005 MPa | 2175 psig<br>150 bar<br>15 MPa | 5075 psig<br>350 bar<br>35MPa | |
| ***EPS25-1450-1001**** | 0 to 1450 psig<br>0 to 100 bar<br>0 to 10 MPa | 10 to 1450 psig<br>0.6 to 100 bar<br>0.06 to 10 MPa | 4 to 1444 psig<br>0.2 to 99.6 bar<br>0.02 to 9.96 MPa | 0 to 1160 psig<br>0 to 80 bar<br>0 to 8 MPa | 290 to 1450 psig<br>20 to 100 bar<br>2 to 10 MPa | 2 psig<br>0.2 bar<br>0.02 MPa | 4350 psig<br>300 bar<br>30 MPa | 9400 psig<br>650 bar<br>65 MPa | |
| ***EPS25-3620-1001*** | 0 to 3625 psig<br>0 to 250 bar<br>0 to 25 MPa | 25 to 3625 psig<br>1.5 to 250 bar<br>0.15 to 25 MPa | 10 to 3610 psig<br>0.5 to 249 bar<br>0.05 to 24.9 MPa | 0 to 2900 psig<br>0 to 200 bar<br>0 to 20 MPa | 725 to 3625 psig<br>50 to 250 bar<br>5 to 25 MPa | 5 psig<br>0.5 bar<br>0.05 MPa | 7250 psig<br>500 bar<br>50 MPa | 17400 psig<br>1200 bar<br>120 MPa | |
| ***EPS25-5800-1001*** | 0 to 5800 psig<br>0 to 400 bar<br>0 to 40 MPa | 40 to 5800 psig<br>2.5 to 400 bar<br>0.25 to 40 MPa | 10 to 5780 psig<br>1 to 398.5 bar<br>0.1 to 39.85 MPa | 0 to 4640 psig<br>0 to 320 bar<br>0 to 32 MPa | 1160 to 5800 psig<br>80 to 400 bar<br>8 to 40 MPa | 10 psig<br>0.5 bar<br>0.05 MPa | 11580 psig<br>800 bar<br>80 MPa | 24650 psig<br>1700 bar<br>170 MPa | |

***inH2O = Inches of Water Column***
**** For gas applications 362 psig (25 bar) maximum pressure!***

Warning! Avoid static and dynamic overpressure exceeding the specified proof pressure.
Exceeding the bursting pressure for even a short time can cause destruction of the unit and possible injuries!

# ProSense® EPS Series (-1001) Digital Pressure Sensors

| ProSense EPS (-1001) Series General Specifications | |
|---|---|
| ***Electrical*** | |
| ***Operating Voltage[1]*** | 18 to 30 VDC |
| ***Current Consumption*** | < 35mA |
| ***Insulation Resistance*** | > 100MΩ (500VDC) |
| ***IEC Protection Class*** | Class III |
| ***Reverse Polarity Protection*** | yes |
| ***Outputs*** | |
| ***OUT1*** | switch |
| ***OUT2*** | switch or analog |
| ***Switch Outputs*** | |
| ***Type*** | PNP or NPN selectable |
| ***Action*** | N.O. or N.C. selectable |
| ***Current Rating*** | 250mA resistive |
| ***Voltage Drop*** | < 2V |
| ***Short Circuit Protection*** | Yes (non-latching) |
| ***Overload Protection*** | Yes |
| ***Switching Frequency*** | ≤ 500Hz |
| ***Function*** | Hysteresis or window |
| ***Analog Output*** | |
| ***Type*** | 4-20 mA or 0-10 VDC selectable |
| ***Load*** | 500Ω max (4-20 mA), 2000Ω min (0-10VDC) |
| ***Accuracy / Deviations (in % of the span) Turn down 1:1*** | |
| ***Switch Point Accuracy*** | < ± 0.4% of the span |
| ***Characteristics Deviation**** | < ± 0.25 (BFSL) / < ± 0.5 (LS) |
| ***Hysteresis*** | < ± 0.1 |
| ***Repeatability***** | < ± 0.1 |
| ***Long-term Stability****** | < ± 0.05 |
| ***Temperature Coefficients (TEMPCO) in the temperature range -25 to 80°C (in % of the span per 10°C)*** | |
| ***Greatest TEMPCO of the zero point*** | 0.2 |
| ***Greatest TEMPCO of the span*** | 0.2 |
| ***Reaction Times*** | |
| ***Power-on Delay Time*** | 0.3 s |
| ***Min. Response Time Switching Output*** | < 1.5 ms |
| ***Delay Time Programmable (dS, dr)*** | 0 to 50s |
| ***Damping for the Switching Output (dAP)*** | 0 to 4s |
| ***Damping for the Analog Output (dAA)*** | 0 to 4s |
| ***Response Time Analog Output*** | < 3ms |
| ***Integrated Watchdog*** | yes |

# ProSense EPS Series (-1001) Digital Pressure Sensors

| ProSense EPS (-1001) Series General Specifications Continued | |
|---|---|
| ***Environment*** | |
| ***Ambient Temperature*** | -13 to 176°F [-25 to 80°C] |
| ***Medium Temperature*** | -13 to 176°F [-25 to 80°C] |
| ***Storage Temperature*** | -40 to 212ºF [-40 to 100ºC] |
| ***Protection*** | IP65 / IP67 |
| ***Mechanical*** | |
| ***Process Connection*** | 1/4" NPT male |
| ***Materials (wetted parts)[2]*** | < 3600 psig measuring range<br>Stainless steel 316L (DIN 1.4404)<br>> 3600 psig measuring range<br>Stainless steel 17-4 / 630 (DIN 1.4542)<br>Ceramics<br>FKM |
| ***Housing Materials*** | Stainless steel 17-4 PH / 630 (DIN 1.4542); stainless steel 316L (DIN 1.4404); PBT+PC-GF 30; PBT-GF 20; PC |
| ***Min. Pressure Cycles*** | 100 million |
| ***Tightening Torque*** | 50Nm (depends on lubrication, seal and pressure rating) |
| ***Restrictor Element Integrated*** | no |
| ***Displays*** | |
| ***Engineering Units*** | 3, 4 or 5 x LED green (depending on model), 10mm character height |
| ***Switching Status*** | 2 x LED yellow |
| ***Measured Values*** | 4-digit alphanumeric display / alternating indication of red and green |
| ***Electrical Connection*** | |
| ***Connection*** | 4-pin M12 quick-disconnect; gold-plated contacts |
| ***Tests / Approvals*** | |
| ***Pressure Equipment Directive*** | 97/23/EG: Group 2 (Non-Hazardous, Nonflammable, Non-Ozidizing fluids or gases) in accordance with sound engineering practice |
| ***EMC*** | DIN EN 61000-6-2<br>DIN EN 61000-6-3 |
| ***Shock Resistance*** | DIN EN 60068-2-27 (50g 11ms) |
| ***Vibration Resistance*** | DIN EN 60068-2-6 (20g 10 to 2000 Hz) |
| ***Agency Approvals*** | UL file # E320431, CE, RoHS |

** BFSL = Best fit straight line / LS = Limit value setting*
*** With temperature fluctuations < 10°C*
**** in % of the span / 6 months*
*[1] To EN50178, SELV, PELV*
*[2] Not cleaned for oxygen service*

# EPS Series (-1001) Digital Pressure Sensors

## EPS Wiring Diagram

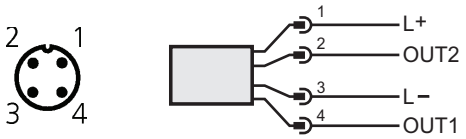


*Note: Wiring colors are based on AutomationDirect CD12L and CD12M 4-pole cable assemblies.*

**Cable Assembly Wiring Colors:**
**Pin 1 - Brown**
**Pin 2 - White**
**Pin 3 - Blue**
**Pin 4 - Black**

## EPS 1001 Series Wiring Examples

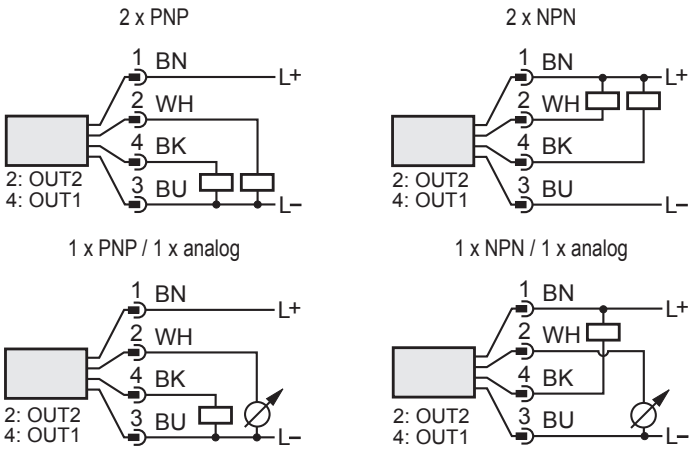


## Dimensions

***mm [inches]***

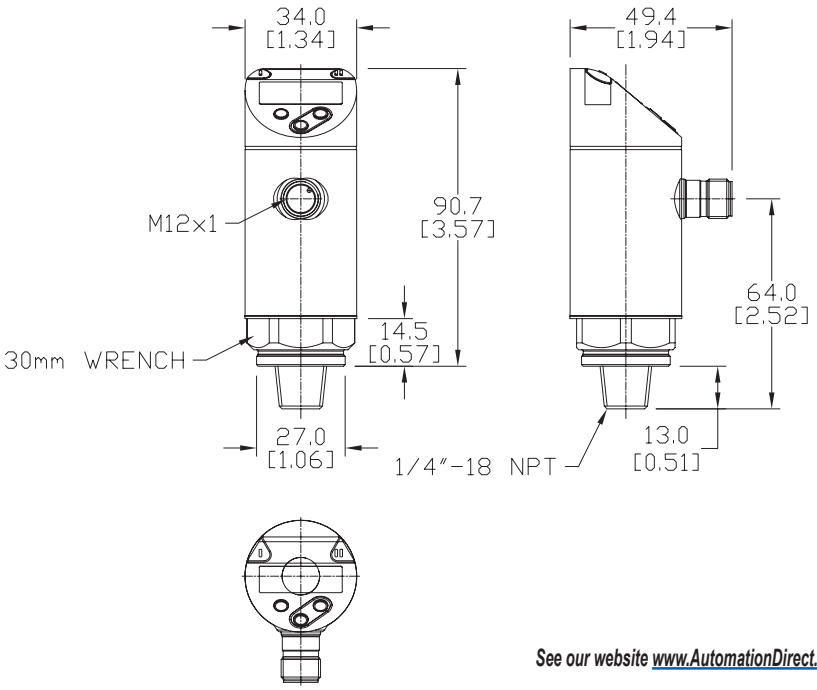


*See our website www.AutomationDirect.com for complete Engineering drawings.*

# ProSense® EPS Series Digital Pressure Sensors

## Overview

AutomationDirect's ProSense EPS Series of Digital Pressure Sensors is ideal for industrial pressure measurement and indication in both gas and liquid applications. Measuring ranges are available from vacuum up to 5800 psig as well as other selectable engineering units such as bar, mbar, kPa, MPa, inches of water column, and inches of mercury. The standard 1/4" NPT male process connection allows for direct installation without requiring extra fittings. With no moving parts such as pistons or springs that can stick or break, the two solid state switch outputs provide a reliable alternative to mechanical pressure switches. Models are also available that allow the second output to be configured as a scalable analog signal turning the unit into a combination pressure switch and transmitter. The built-in two-color digital display is easy to read from a distance and provides indication of measured pressure and switch setpoints. It can be set to change color between red and green based on measured value or output status and rotated 180° for installation flexibility. Two large bright LEDs indicate output status. For optimum visibility the sensor housing can be rotated 345° after installation. Simple pushbutton setup allows the EPS to be easily and quickly configured prior to installation without the need for a separate pressure reference gauge. Encased in a stainless steel housing the EPS allows for a high IP67 ingress protection rating achieving its atmospheric pressure reference via the 4-pin M12 electrical connection. A protective cover and mounting bracket are available accessories. The compact and robust design and construction of the ProSense EPS series withstands extreme shock and vibration, provides high accuracy and reliability, and incorporates the best combination of over pressure, burst pressure and long term stability for each measuring range.

**ProSense EPS Digital Pressure Sensors Selection Guide**

| Part Number | Price | Pressure Range | Selectable Engineering Units | Process Connection | Electrical Connection | Operating Voltage | Outputs |
|---|---|---|---|---|---|---|---|
| EPS25-V14-1001 | $322.00 | -14.5 to 14.5 psig | psig, mbar, kPa, $inH_20$, inHg | 1/4" NPT male | 4-pin M12 quick-disconnect | 18 to 30 VDC | OUT 1: Switch (selectable N.O. or N.C. / PNP or NPN)<br>OUT 2: Switch (selectable N.O. or N.C. / PNP or NPN) or Analog (selectable 4-20 mA or 0-10 VDC) |
| EPS25-100WC-1001 | $322.00 | -5 to 100.4 $inH_2O$ | $inH_20$, mbar, kPa, mmWS | | | | |
| EPS25-14-1001 | $322.00 | -0.72 to 14.5 psig | psig, mbar, kPa, $inH_2O$ | | | | |
| EPS25-36-1001 | $322.00 | -1.8 to 36.25 psig | psig, bar, kPa | | | | |
| EPS25-V145-1001* | $322.00 | -14.6 to 145 psig | psig, bar, MPa | | | | |
| EPS25-360-1001* | $322.00 | -14.5 to 362.5 psig | psig, bar, MPa | | | | |
| EPS25-1450-1001* | $322.00 | 0 to 1450 psig | psig, bar, MPa | | | | |
| EPS25-3620-1001 | $322.00 | 0 to 3625 psig | psig, bar, MPa | | | | |
| EPS25-5800-1001 | $322.00 | 0 to 5800 psig | psig, bar, MPa | | | | |
| EPS25-V14-1003 | $283.00 | -14.5 to 14.5 psig | psig, mbar, kPa, inHg | | | | OUT 1: Switch (selectable N.O. or N.C. / PNP or NPN)<br>OUT 2: Switch (selectable N.O. or N.C. / PNP or NPN) |
| EPS25-14-1003 | $283.00 | 0 to 14.5 psig | psig, mbar, kPa, inHg | | | | |
| EPS25-36-1003 | $283.00 | 0 to 36.2 psig | psig, bar, kPa | | | | |
| EPS25-V145-1003* | $283.00 | -14.5 to 145 psig | psig, bar, MPa | | | | |
| EPS25-360-1003* | $283.00 | 0 to 362 psig | psig, bar, MPa | | | | |
| EPS25-1450-1003* | $283.00 | 0 to 1450 psig | psig, bar, MPa | | | | |
| EPS25-3620-1003 | $283.00 | 0 to 3620 psig | psig, bar, MPa | | | | |
| EPS25-5800-1003 | $283.00 | 0 to 5800 psig | psig, bar, MPa | | | | |

** For gas applications 362 psig (25bar) maximum pressure!*

# EPS Series Digital Pressure Sensors - Accessories

*Part No. EPS-CV*

*Part No. EPS-BKT1*

| EPS Series Digital Pressure Sensors - Accessories | | | |
|---|---|---|---|
| ***Part No.*** | ***Description*** | ***Price*** | ***Wt (lb)*** |
| ***EPS-CV*** | ProSense protective cover, for use with ProSense EPS series digital pressure sensors. | $6.25 | 0.1 |
| ***EPS-BKT1*** | ProSense mounting bracket, for use with ProSense EPS series digital pressure sensors. | $8.00 | 0.1 |

| EPS Series Digital Pressure Sensor Accessory Specifications | |
|---|---|
| ***Part No.*** | ***Material*** |
| ***EPS-CV*** | PP (polypropylene) |
| ***EPS-BKT1*** | Fiber and mineral reinforced polyamide |

## Dimensions

***mm [inches]***

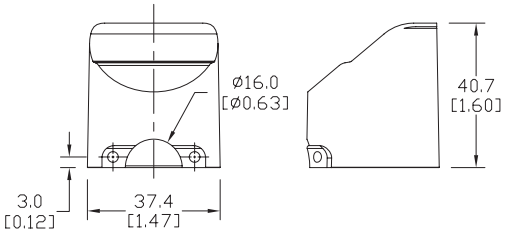


*Part No. EPS-CV*

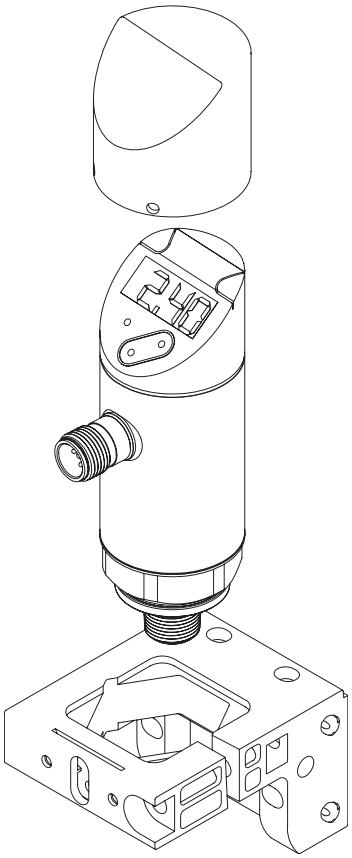

*Assembly Example*

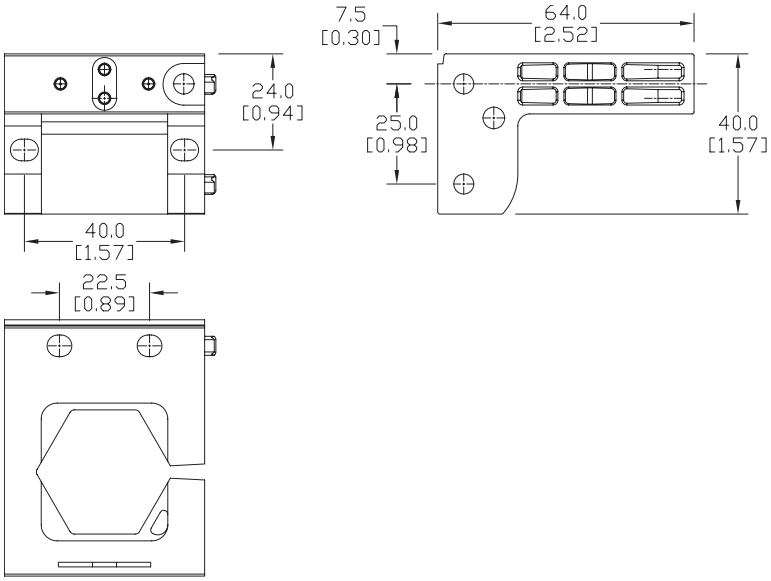


*Part No. EPS-BKT1*

*See our website www.AutomationDirect.com for complete Engineering drawings.*